7.5KW 3 ϕ 4W Input With High Voltage Output RST-7K5-HV series

Forced-air cooling: Blank type

Front

Back

Dimension

L	*	W	*	H	
460	*	211	*	83.5(2U)	mm
18.1	*	8.3	*	3.29(2U)	inch

Water cooling: L type

User's Manual
Click Me

Front

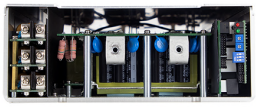

Back

Ordering No.: PGG1WHS-684

Dimension

L	*	W	*	H	
460	*	216	*	83.5(2U)	mm
18.1	*	8.5	*	3.29(2U)	inch

Parallel PFC c UL us UL62368-1 BS EN/EN62368-1 EAC TPTC004 CB IEC62368-1 CE UKCA

Automate Industrial Telecom EV

Features

- 3 ψ 3-wire / △196~305VAC or 3 ψ 4-wire / Y 340~530VAC
- High efficiency up to 95%
- Water / forced air cooling selectable
- Output voltage and constant current level programmable
- Wide voltage adjustment range 1~120%
- Active current sharing up to 4 units(28.5KW)
- Built-in remote ON-OFF control / Alarm signal
- Protections: Short circuit / Overload / Over voltage / Over temperature / Fan fail
- 5 years warranty

Applications

- Energy & power system
- U.V or laser diode application
- Electrolysis system
- Factory control or automation apparatus
- Burn-in facility
- RF application
- EV charging station

GTIN CODE

MW Search: https://www.meanwell.com/serviceGTIN.aspx

Description

RST-7K5-HV is a 7.5KW 3 ϕ input enclosed type AC/DC power supply. This series operates for the wide range three phase AC input and offers the models with the high voltage DC output(115V/230V/380V) that mostly demanded from the industry. Two types of cooling methods, forced air and water cooling, that can be working at ambient temperature up to 70℃. Moreover, RST-7K5-HV provides vast design flexibility by equipping various built-in functions such as the output programming, active current sharing, remote ON-OFF control, alarm signals.....etc.

Model Encoding

RST - 7K5 - 115 □

- □: L: Water cooling; Blank: Forced air cooling
- 115: Output voltage (115V/230V/380V)
- 7K5: Output wattage
- RST: Series name

SPECIFICATION

MODEL		RST-7K5-115	RST-7K5-230	RST-7K5-380
OUTPUT	DC VOLTAGE (factory default)	115V	230V	380V
	CURRENT (factory default)	65A	32.4A	19.77A
	CURRENT RANGE	0 ~ 65A	0 ~ 34.5A	0 ~ 22.5A
	RATED POWER	7475W	7452W	7515W
	FULL POWER VOLTAGE RANGE	115 ~ 138V	216 ~ 260V	334 ~ 400V
	RIPPLE & NOISE (max.) Note.2	1Vp-p	2Vp-p	4Vp-p
	VOLTAGE ADJ. RANGE	90 ~ 138V	170 ~ 260V	260 ~ 400V
		Can be adjusted via built-in potentiometer		
	VOLTAGE TOLERANCE Note.3	±1.0%	±1.0%	±1.0%
	LINE REGULATION	±0.5%	±0.5%	±0.5%
	LOAD REGULATION	±0.5%	±0.5%	±0.5%
	SETUP, RISE TIME	3000ms, 200ms at full load		
	HOLD UP TIME (Typ.)	16ms 230VAC/400VAC at 75% load 10ms / 230VAC/400VAC at full load		
INPUT	VOLTAGE RANGE	3 ψ 3W/△196~305VAC or 3 ψ 4W/Y 340~530VAC		
	FREQUENCY RANGE	47 ~ 63Hz		
	POWER FACTOR (Typ.)	≧0.98/230VAC(400VAC)/≧0.97/277VAC(480VAC) at full load		
	EFFICIENCY (Typ.) Note.7	94%	95%	95%
	AC CURRENT (Typ.)	22.5A/230VAC(3 ψ 3-wire /△) 13A/400VAC(3 ψ 4-wire / Y)		
	INRUSH CURRENT (Typ.)	75A/230VAC(3 ψ 3-wire /△) 50A/400VAC(3 ψ 4-wire / Y)		
	LEAKAGE CURRENT	<3.5mA/Y 530VAC <10mA /△305VAC		
PROTECTION	OVERLOAD	100 ~ 107% of rated current		
		Protection type : Constant current limiting. After O/P voltage falls, unit will shut down after 5 sec. re-power on to recover		
	OVER VOLTAGE	145 ~ 166V	273 ~ 312V	420 ~ 480V
		Protection type : Shut down o/p voltage, re-power on to recover		
	OVER TEMPERATURE	Shut down o/p voltage, recovers automatically after temperature goes down		
FUNCTION	CURRENT SHARING	Up to 4 units. Please refer to the Function Manual		
	OUTPUT VOLTAGE PROGRAMMABLE	Adjustment of output voltage is allowable between 1 ~ 120% of nominal output voltage. Please refer to the PV curve Function Manual		
	CONSTANT CURRENT LEVEL PROGRAMMABLE	Adjustment of constant current level is allowable between 20 ~ 100% of rated current. Please refer to the Function Manual		
	REMOTE ON-OFF CONTROL	Please refer to the Function Manual		
	ALARM SIGNAL OUTPUT	AC fail, DC OK, fan fail, OTP. Please refer to the Function Manual		
ENVIRONMENT	WORKING TEMP.	-30 ~ +70℃ (Refer to "Derating Curve")		
	WORKING HUMIDITY	20 ~ 90% RH non-condensing		
	STORAGE TEMP., HUMIDITY	-40 ~ +85℃, 10 ~ 95% RH non-condensing		
	TEMP. COEFFICIENT	±0.03%/℃ (0 ~ 45℃)		
	VIBRATION	10 ~ 500Hz, 2G 10min./1cycle, 60min. each along X, Y, Z axes		
SAFETY & EMC (Note 8)	SAFETY STANDARDS	UL62368-1, CAN/CSA C22.2 No. 62368-1, TUV BS EN/EN62368-1, EAC TP TC 004 approved		
	WITHSTAND VOLTAGE Note.4	I/P-O/P:4.3KVDC I/P-FG:2.8KVDC O/P-FG:2.8KVDC		
	ISOLATION RESISTANCE Note.4	I/P-O/P, I/P-FG, O/P-FG:100M Ohms / 500VDC / 25℃/ 70% RH		
	EMC EMISSION	**Parameter**	**Standard**	**Test Level / Note**
		Conducted	BS EN/EN55032 (CISPR32) / BS EN/EN55011 (CISPR11)	Class A
		Radiated	BS EN/EN55032 (CISPR32) / BS EN/EN55011 (CISPR11)	Class A
		Harmonic Current	BS EN/EN61000-3-2	-----
		Voltage Flicker	BS EN/EN61000-3-3	-----
	EMC IMMUNITY	BS EN/EN55024 , BS EN/EN61204-3, BS EN/EN61000-6-2		
		Parameter	**Standard**	**Test Level / Note**
		ESD	BS EN/EN61000-4-2	Level 3, 8KV air ; Level 2, 4KV contact
		Radiated	BS EN/EN61000-4-3	Level 3
		EFT / Burst	BS EN/EN61000-4-4	Level 3
		Surge	BS EN/EN61000-4-5	Level 4, 4KV/Line-Earth ; Level 3, 2KV/Line-Line
		Conducted	BS EN/EN61000-4-6	Level 3
		Magnetic Field	BS EN/EN61000-4-8	Level 4
		Voltage Dips and Interruptions	BS EN/EN61000-4-11	>95% dip 0.5 periods, 30% dip 25 periods, >95% interruptions 250 periods
OTHERS	MTBF	234.5K hrs min. Telcordia SR-332 (Bellcore) ; 27.1K hrs min. MIL-HDBK-217F (25℃)		
	DIMENSION	RST-7K5: 460*211*83.5mm (L*W*H) RST-7K5-L: 460*216*83.5mm (L*W*H)		
	PACKING	RST-7K5: 10.9Kg; 1pcs/11.9Kg/1.3CUFT RST-7K5-L: 10.1Kg; 1pcs/11.1Kg/1.13CUFT		

NOTE

1. All parameters NOT specially mentioned are measured at △230VAC(Y 400VAC) input, rated load and 25℃ of ambient temperature.
2. Ripple & noise are measured at 20MHz of bandwidth by using a 12" twisted pair-wire terminated with a 0.1uf & 47uf parallel capacitor.
3. Tolerance :includes set up tolerance, line regulation and load regulation.
4. During withstand voltage and isolation resistance testing, the screw "A" shall be temporarily removed, and shall be installed back after the testing.
5. Derating may be needed under low input voltages. Please check the derating curve for more details.
6. If use PV signal to adjust Vo, under creatin operation conditions, ripple noise of Vo might go over rating defined in this specification.
7. The efficiency is measured at △: 230VAC/Y: 400VAC input. The efficiency level is measured at output voltage 115V(115V model)/230V(230V model)/380V(380V model).
8. The power supply is considered a component which will be installed into a final equipment. All the EMC tests are been executed by mounting the unit on a 600mm*900mm metal plate with 1mm of thickness. The final equipment must be re-confirmed that it still meets EMC directives. For guidance on how to perform these EMC tests, please refer to "EMI testing of component power supplies." (as available on https://www.meanwell.com//Upload/PDF/EMI_statement_en.pdf)
9. The ambient temperature derating of 3.5℃/1000m with fanless models and of 5℃/1000m with fan models for operating altitude higher than 2000m(6500ft).
10. An unstable O/P voltage is expected in the first 300ms after power on. A minimum load of 5% is suggested if fast load change is required at power on phase.

※ Product Liability Disclaimer : For detailed information, please refer to https://www.meanwell.com/serviceDisclaimer.aspx

■ Block Diagram

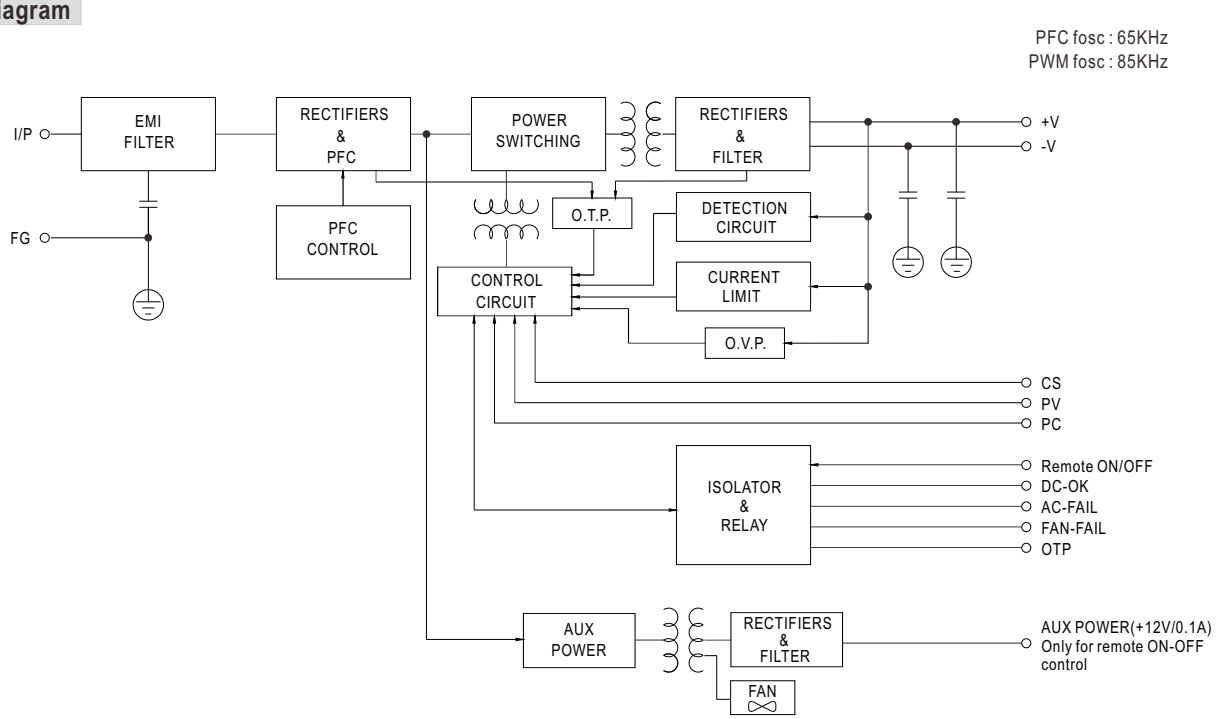

■ DERATING CURVE

Blank Type:

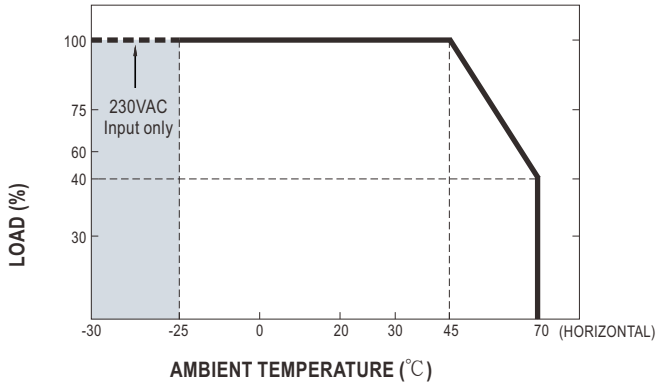

L Type:

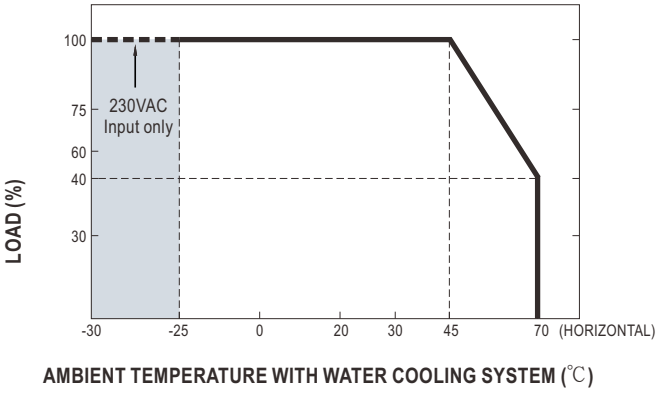

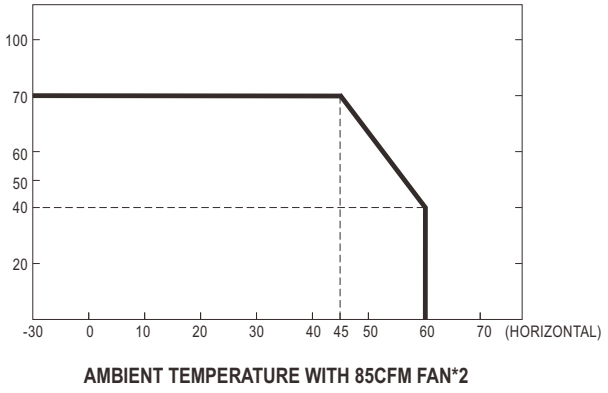

L Type:

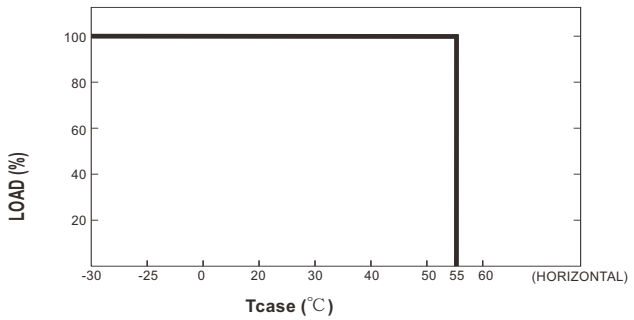

■ STATIC CHARACTERISTICS

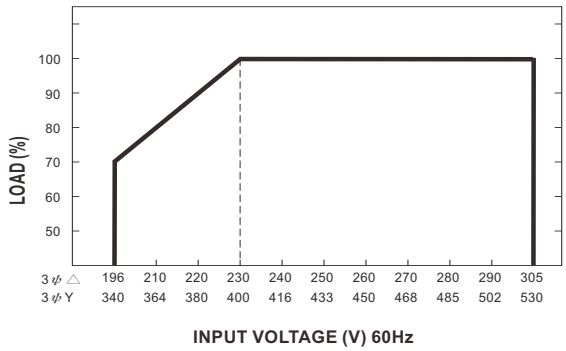

■ EFFICIENCY VS LOAD (380V MODEL)

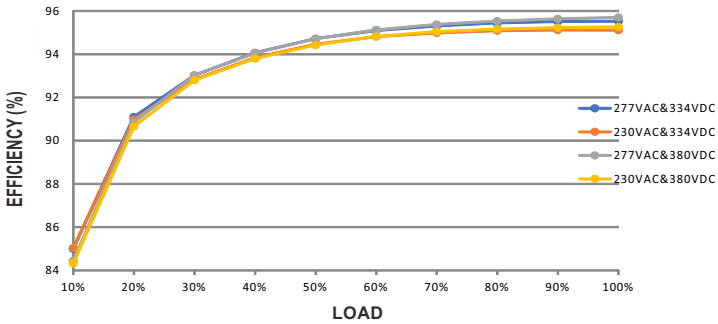

■ AC Power Connection

◎3 ψ 3-wire / △ 196~305VAC

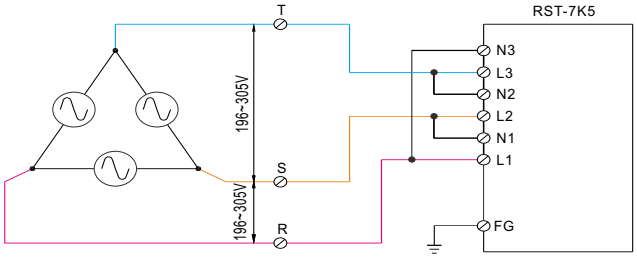

Fig 1.1

◎3 ψ 4-wire / Y 340~530VAC

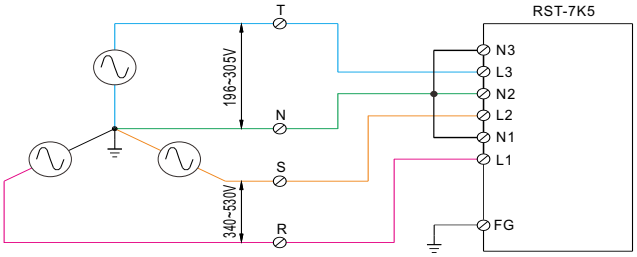

Fig 1.2

■Note : RST-7K5 can also be operated by 1 ψ 2 - wire 196~305VAC input. Please refer to the connection diagram below.
Operating with 1 ψ 2 - wire may lead to certain characteristics different from the specification, such as the larger Ripple and Noise. Should there be any issues, please contact MEAN WELL.

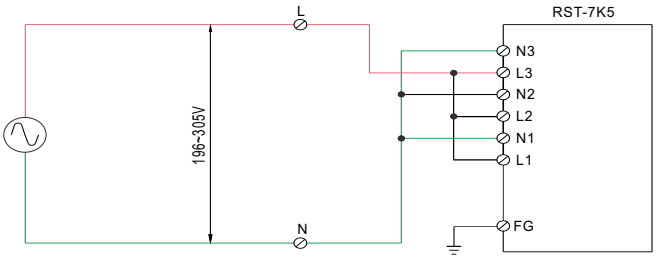

Fig 1.3

■ Function Manual

1.Output Voltage Programming (or, PV / remote voltage programming / remote adjust / margin programming / dynamic voltage trim)

(1)Default by potentiometer (SVR)

(a)Have the DIP switch position-3 set as

(b)Output voltage can be trimmed by SVR. (SVR1: fine-tuning; SVR2: wide adjustment)

(2)By Output Voltage Programming

(a)Have the DIP switch position-3 set as

(b)The output voltage can be trimmed to 1~120% by applying EXTERNAL VOLTAGE between *PV+* and *PV-* on CN86 or CN87.

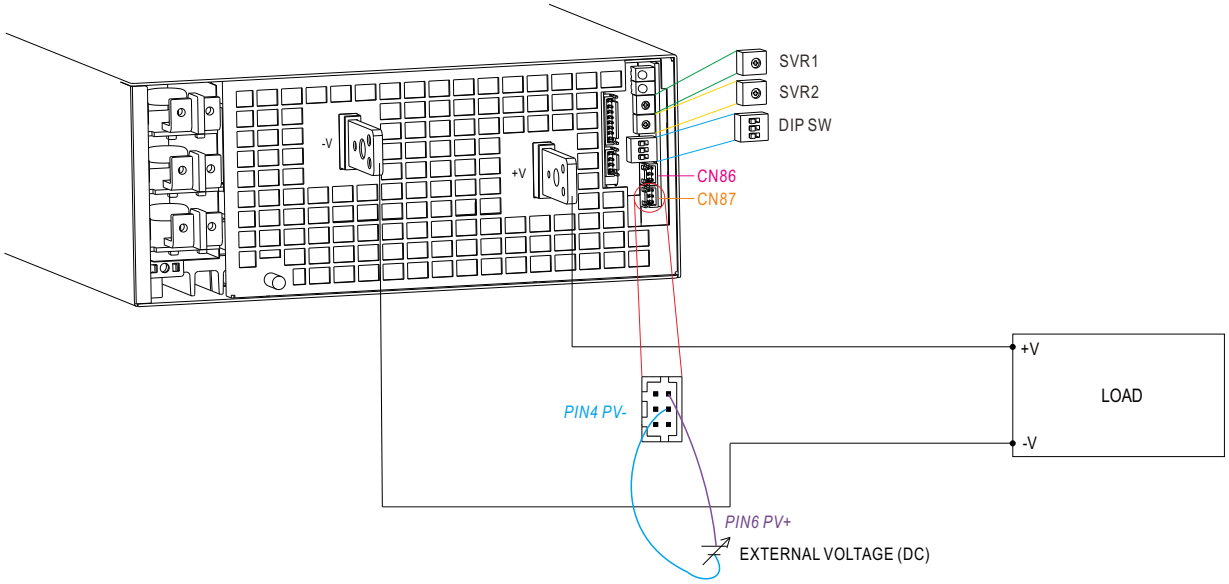

Fig 1.1

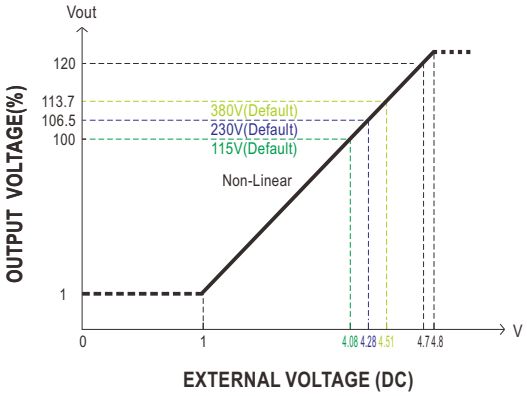

◎ The 100% output voltage is 115/216/334V.

◎ When PV signal to adjust voltage under Vo<11.5V(115V model) / 21.6V(230V model) / 33.4V(380V model) with dynamic load condition, the Vo overshoot & undershoot might go over rating.

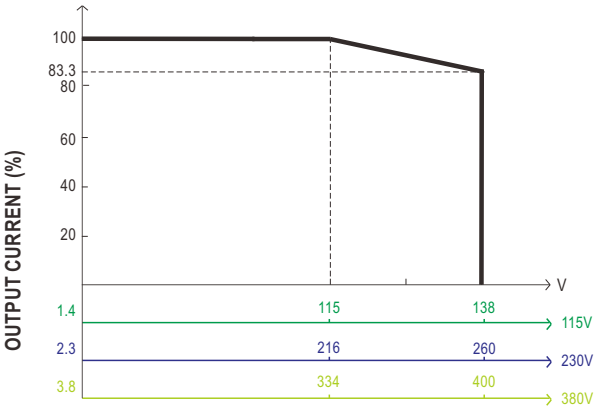

◎ The rated current should change with the Output Voltage Programming accordingly.

◎ Maximum output current is Based on rated power wattage.

Fig 1.2

2.Constant Current Programming (or, PC / remote current programming / dynamic current trim)

(1)Default Overload Protection(OLP) 100~107% of rated current

(a)Have the DIP switch position-2 set as

(b)Output current is set default value.

(2)By Constant Current Level Programming

(a)Have the DIP switch position-2 set as

(b)The constant current level can be trimmed to 20~100% of the rated current by applying EXTERNAL VOLTAGE between *PC+* and *PC-* on CN86 or CN87.

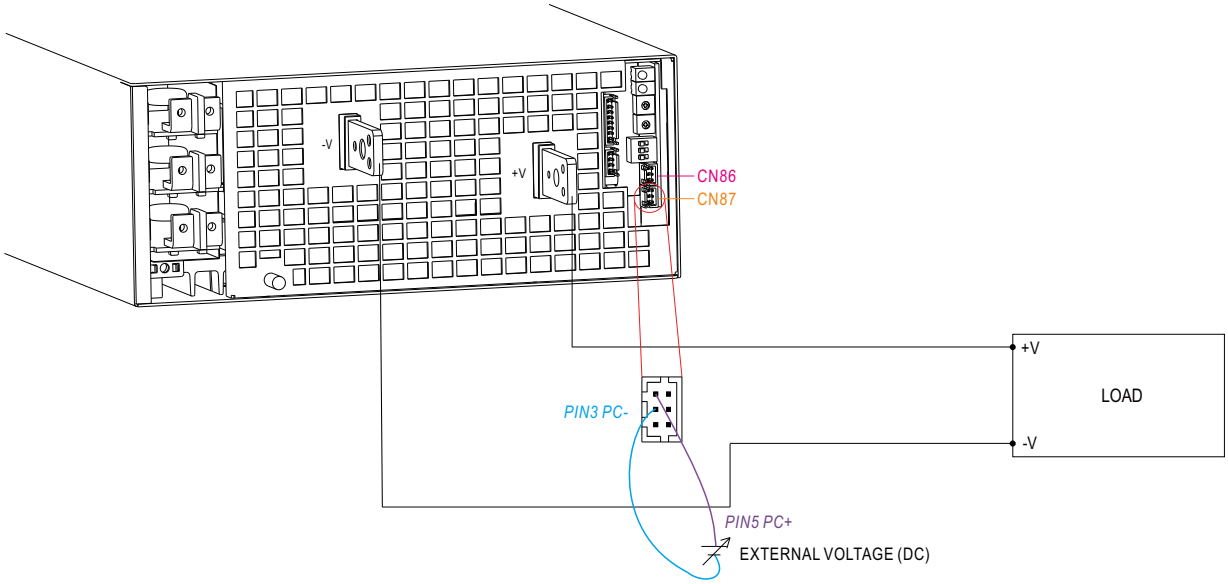

Fig 2.1

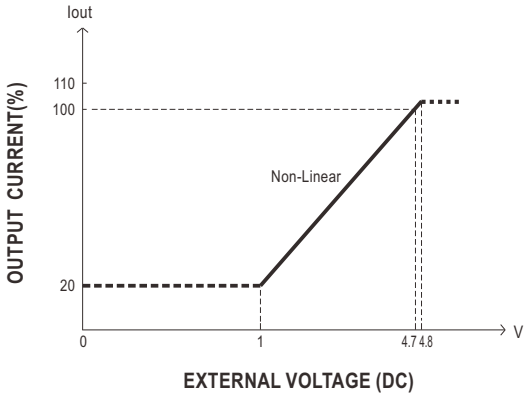

Fig 2.2

◎ Output will shut down after O/P voltage is below < 80% of Vset for 6 sec, re-power on to recover.

◎ The 100% output current is Maximum current.

3.Select Overload Protection (OLP) Mode

(1)Default Continuous Constant Current mode

Have the DIPswitch position-1 set as

,and RST-7K5 will work in continuous constant current mode when the output is overloaded and the output voltage is greater than 50% of the rated output voltage.

(2)Delay Shutdown mode

Have the DIPswitch position-1 set as

,and RST-7K5 will shut down after 5 seconds of constant current operation, when the output is overloaded or short-circuited.

4.Remote ON-OFF Control

※ The power supply can be turned ON-OFF by using the "Remote ON-OFF" function.

Between *Remote ON-OFF*(*CN96 pin*5,7) and 12V-AUX(*CN96 pin*1,3)	Output Status
Switch close (Short)	power supply ON
Switch open (Open)	power supply OFF

Table 4.1

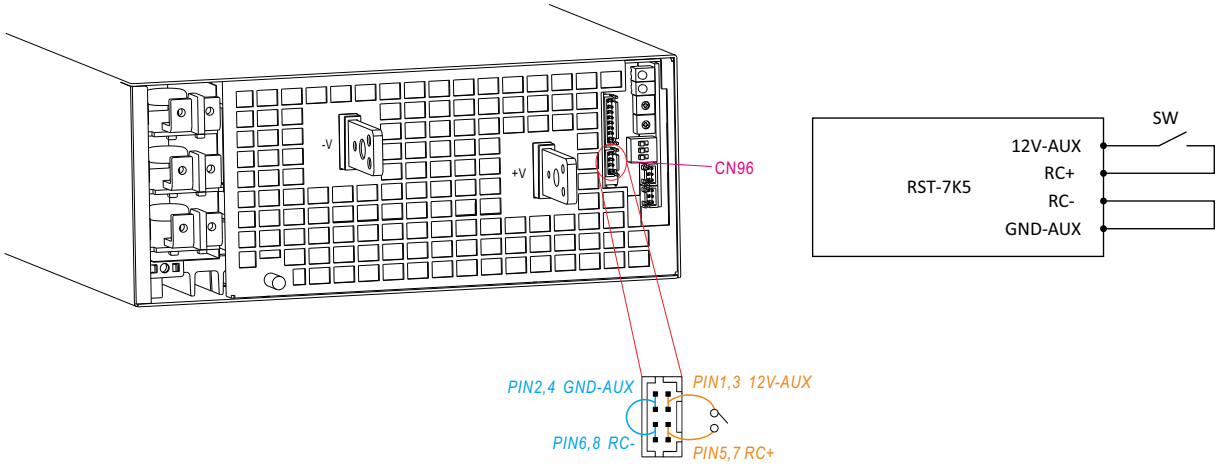

Fig 4.1

5.Alarm Signal Output

※ There are 4 alarm signals on CN99, and each signal can select two types of output circuit.

(1)Relay contact output {OTP1, OTP1-GND) ; (DC-OK1, DC-OK1-GND) ; (AC-FAIL1-GND, AC-FAIL1) ; (FAN-FAIL1-GND, FAN-FAIL1)}

Normally open contact. "Short" when the alarm arises. Relay contact rating(maximum) is 30V/1A resistive.

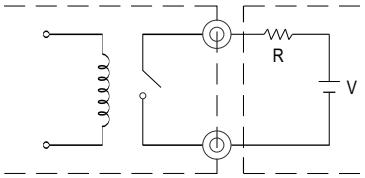

Fig 5.1

(2)Open collector output {DC-OK2-GND, DC-OK2) ; (AC-FAIL2-GND, AC-FAIL2) ; (OTP2, OTP2-GND) ; (FAN-FAIL2, FAN-FAIL2-GND)}

An external voltage source is required for this function that is shown in Fig 5.2. These signals are isolated from output. The maximum sink current is 10mA and the maximum external voltage is 20V (there is a built-in 24V zener diode in inner circuitry).

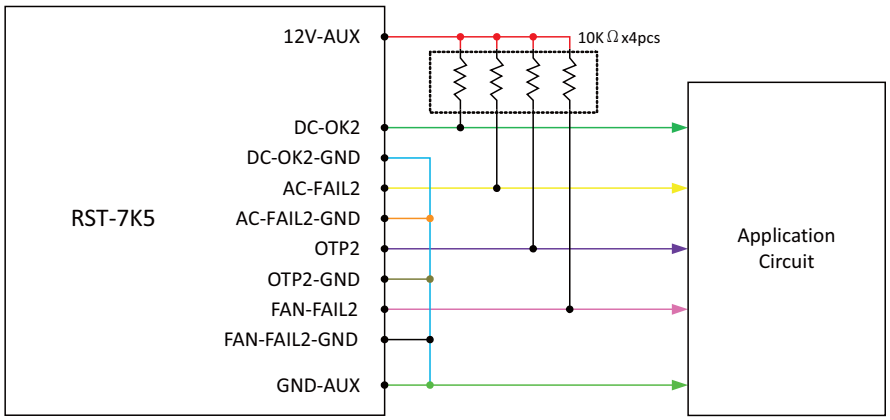

Fig 5.2

6.Current Sharing

RST-7K5 has the built-in active current sharing function and can be connected in parallel, up to 4 units, to provide higher output power as exhibited below :

※ The power supplies should be paralleled using short and large diameter wiring and then connected to the load.

※ In parallel connection, power supply with the highest output Voltage will be the master unit and its Vout will be the DC bus voltage.

※ The total output current must not exceed the value determined by the following equation:
Maximum output current at parallel operation=(Rated current per unit)×(Number of unit)×0.95

※ When the total output current is less than 5% of the total rated current, or say (5% of Rated current per unit)×(Number of unit) the current shared among units may not be balanced.

※ Under parallel operation ripple of the output voltage may be higher than the SPEC at light load condition. It will go back to normal ripple level once the output load is more than 5%.

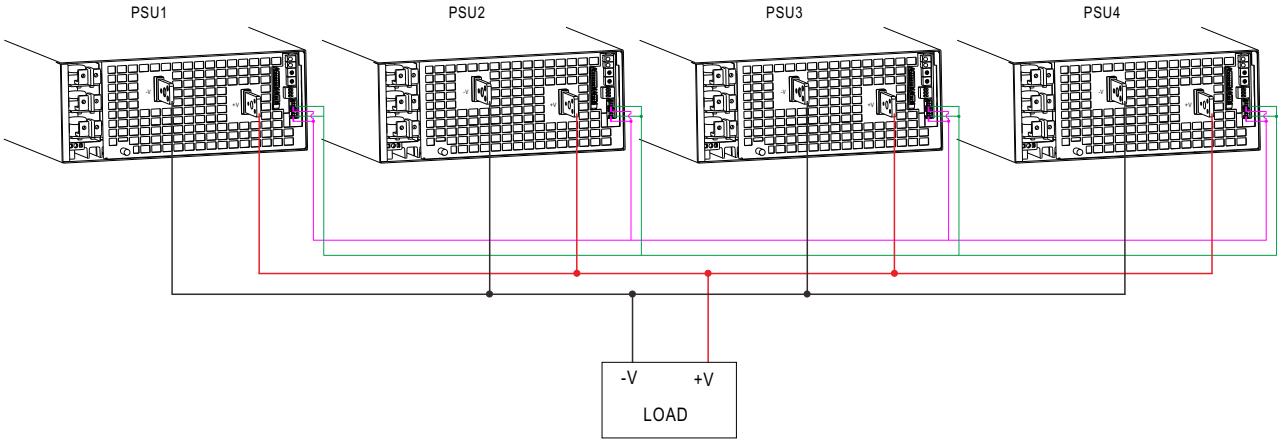

Fig 6.1

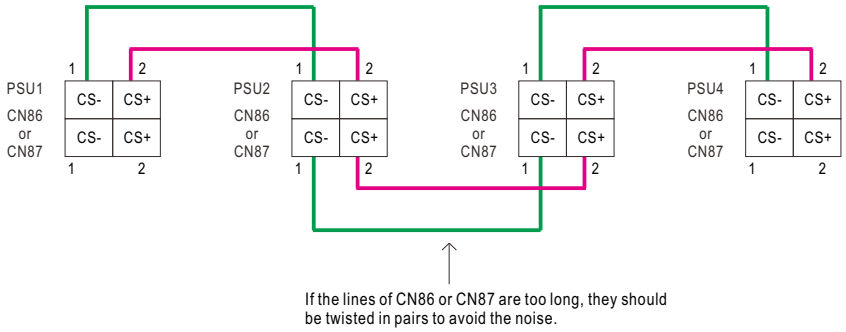

◎ CS+,CS- are connected mutually in parallel.

■ Mechanical Specification

(Unit: mm , tolerance ±0.5mm)

Case No.223E

※ **Forced-Air Cooling (Blank type)**

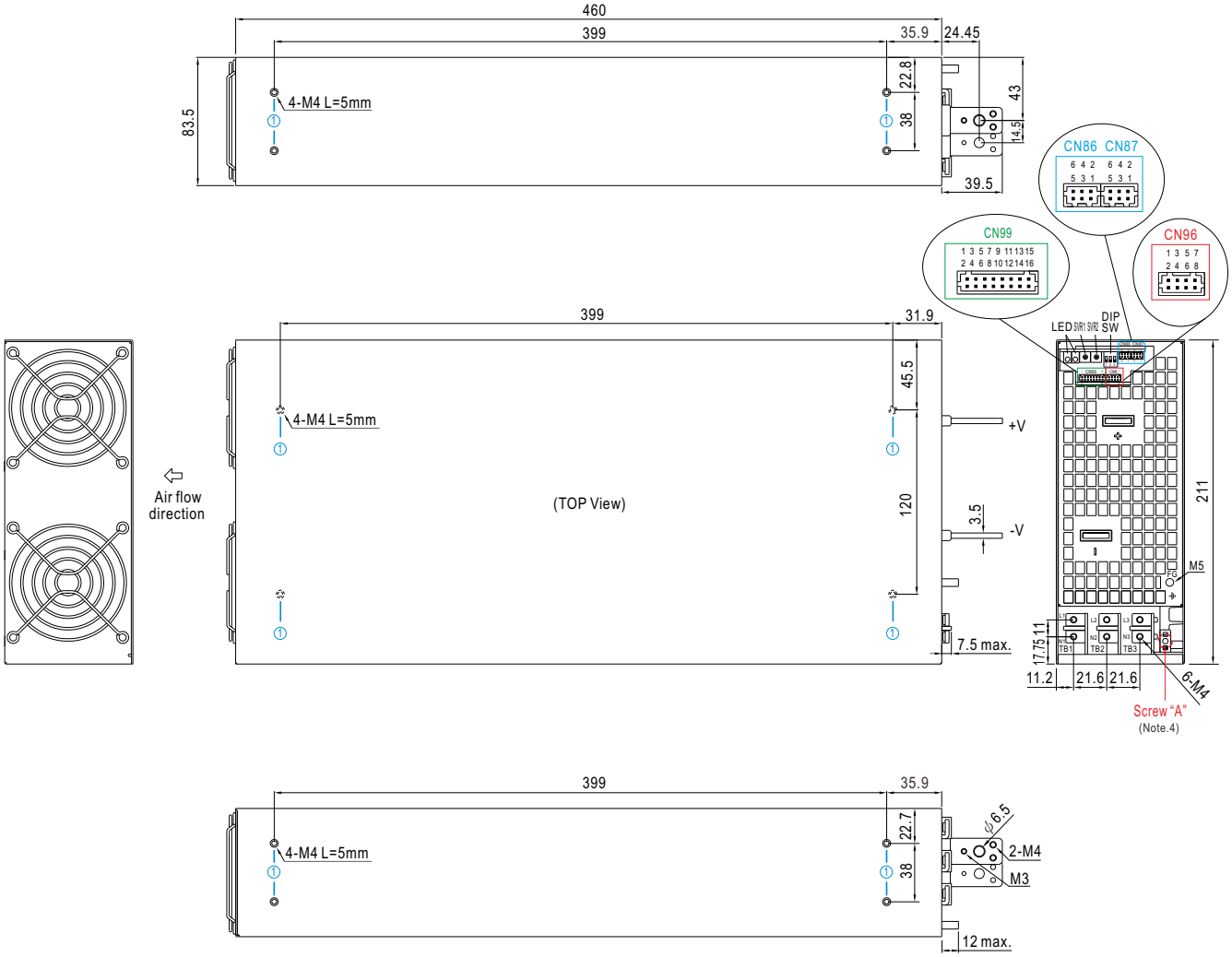

※ Mounting Instruction

Hole No.	Recommended Screw Size	MAX. Penetration Depth L	Recommended mounting torque
①	M4	5mm	7~10Kgf-cm

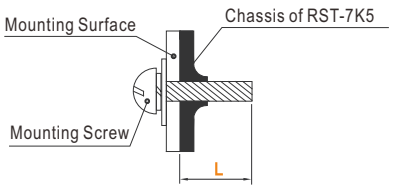

※ **Water Cooling (L type)**

Case No.295A

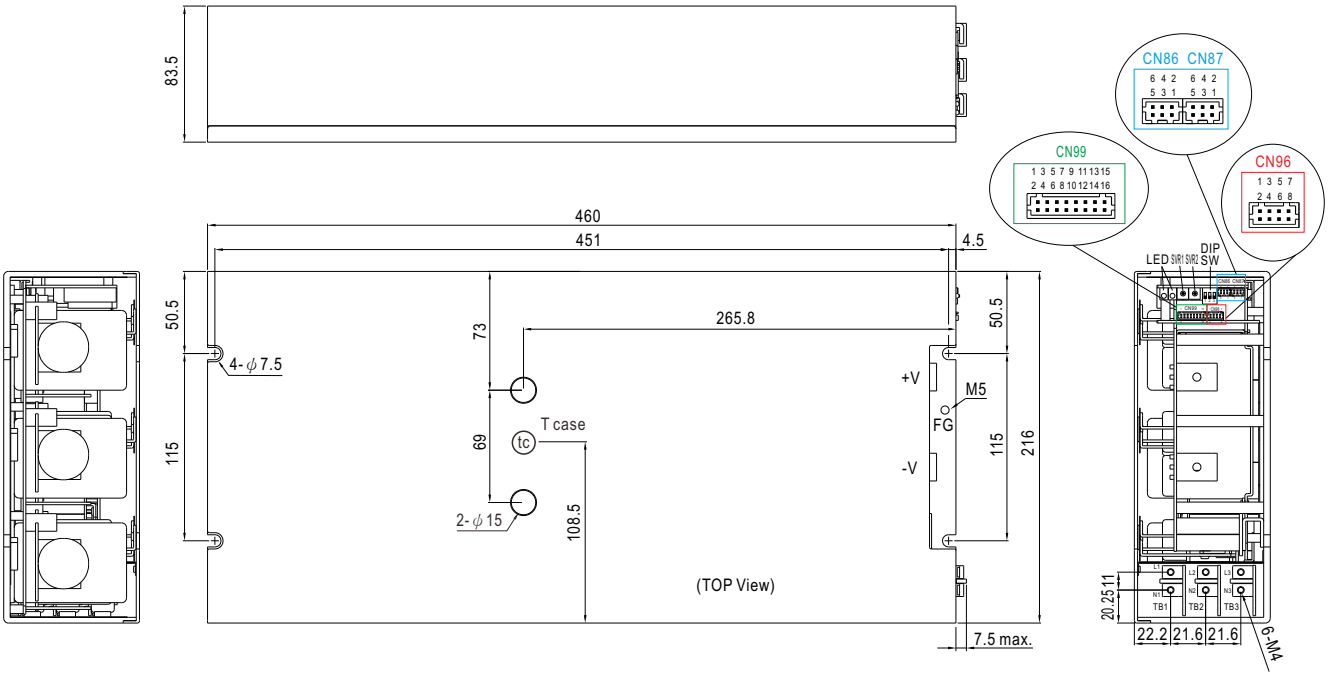

• tc : Max. Case Temperature

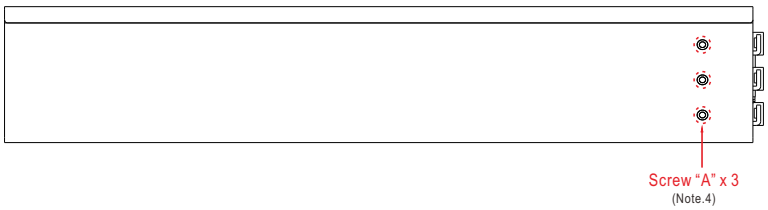

※ Control Pin No. Assignment (CN86,CN87) : HRS DF11-06DP-2DS or equivalent

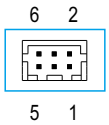

Mating Housing	HRS DF11-06DS or equivalent
Terminal	HRS DF11-**SC or equivalent

◎ CN86 and CN87 are connected internally.

Pin No.	Function	Description
1	CS-	Current sharing signal. When units are connected in parallel, the CS pins of the units should be connected to allow current balance between units.
2	CS+	
3	PC-	Connection for output current programming.
4	PV-	Connection for output voltage programming.
5	PC+	Connection for output current programming.
6	PV+	Connection for output voltage programming.

※ Control Pin No. Assignment (CN96) : HRS DF11-08DP-2DS or equivalent

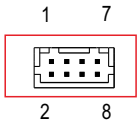

Mating Housing	HRS DF11-08DS or equivalent
Terminal	HRS DF11-**SC or equivalent

Pin No.	Function	Description
1,3	12V-AUX	Auxiliary voltage output, 11.4~12.6V, referenced to pin 2,4(GND-AUX). Only for remote on-off control & Alarm signal. The maximum load current is 0.1A. This output is not controlled by the "Remote ON/OFF" function.
2,4	GND-AUX	Auxiliary voltage output GND. The signal return is isolated from the output terminals (+V & -V).
5,7	RC+	The output can be turned ON-OFF in association with RC+ and RC-.
6,8	RC-	

※ Control Pin No. Assignment (CN99) : HRS DF11-16DP-2DS or equivalent

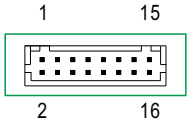

Mating Housing	HRS DF11-16DS or equivalent
Terminal	HRS DF11-**SC or equivalent

Pin No.	Function	Description
1	DC-OK1	Alarm signal of DC-OK. Normally open contact. "Short" when the PSU turns on. Relay contact rating(maximum) is 30V/1A resistive.
2	AC-FAIL1	Alarm signal of AC-fail. Normally open contact. "Short" when the PSU input voltage is too low. Relay contact rating(maximum) is 30V/1A resistive.
3	DC-OK1-GND	Alarm signal of DC-OK. Normally open contact. "Short" when the PSU turns on. Relay contact rating(maximum) is 30V/1A resistive.
4	AC-FAIL1-GND	Alarm signal of AC-fail. Normally open contact. "Short" when the PSU input voltage is too low. Relay contact rating(maximum) is 30V/1A resistive.
5	DC-OK2	Alarm signal of DC-OK. Open collector signal. Low when the PSU turns on. The maximum sink current is 10mA and the maximum external voltage is 20V.
6	AC-FAIL2	Alarm signal of AC fail. Open collector signal. Low when the PSU input voltage is too low. The maximum sink current is 10mA and the maximum external voltage is 20V.
7	DC-OK2-GND	Alarm signal of DC-OK. Open collector signal. Low when the PSU turns on. The maximum sink current is 10mA and the maximum external voltage is 20V.
8	AC-FAIL2-GND	Alarm signal of AC fail. Open collector signal. Low when the PSU input voltage is too low. The maximum sink current is 10mA and the maximum external voltage is 20V.
9	OTP1	Alarm signal of OTP. Normally open contact. "Short" when the PSU over temperature protection occurs. Relay contact rating(maximum) is 30V/1A resistive.
10	FAN-FAIL2	Alarm signal of fan fail. Open collector signal. Low when the internal fan fails. The maximum sink current is 10mA and the maximum external voltage is 20V.
11	OTP1-GND	Alarm signal of OTP. Normally open contact. "Short" when the PSU over temperature protection occurs. Relay contact rating(maximum) is 30V/1A resistive.
12	FAN-FAIL2-GND	Alarm signal of fan fail. Open collector signal. Low when the internal fan fails. The maximum sink current is 10mA and the maximum external voltage is 20V.
13	OTP2	Alarm signal of OTP. Open collector signal. Low when the PSU over temperature protection occurs. The maximum sink current is 10mA and the maximum external voltage is 20V.
14	FAN-FAIL1	Alarm signal of fan fail. Normally open contact. "Short" when the internal fan fails. Relay contact rating(maximum) is 30V/1A resistive.
15	OTP2-GND	Alarm signal of OTP. Open collector signal. Low when the PSU over temperature protection occurs. The maximum sink current is 10mA and the maximum external voltage is 20V.
16	FAN-FAIL1-GND	Alarm signal of fan fail. Normally open contact. "Short" when the internal fan fails. Relay contact rating(maximum) is 30V/1A resistive.

※LED Status Indicators

LED	Description
Green(LED1)	LED on when output voltage is OK
Red(LED2)	LED on when any protection occurs

※AC Input Terminal Pin No. Assignment (TB1 or TB2 or TB3)

Pin No.	Assignment	Diagram	Maximum mounting torque
1	AC/L	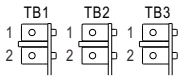	7~10Kgf-cm
2	AC/N		

※DIP Switch Position Assignment(DIP-SW): Please refer to the Function Manual.

Pin No.	Assignment	Diagram
1	Overload Protection (OLP)	DIP-SW PIN2:PC DIP-SW PIN3:PV
2	Output Current Programming (PC)	
3	Output Voltage Programming (PV)	

1.Suitable for water cooling (L type)

Ambient temperature: 45℃
Inlet temperature: 5~15℃
Flow rate (minimum): 4~ 10LPM
Humidity: 20~90% RH non-condensing
Pressure drop 6 psi (minimum), pressure inlet 80 psi (maximum)

If optional cold plate is in need, please contact MEAN WELL for details.

Ordering No.:PGG1WHS-684

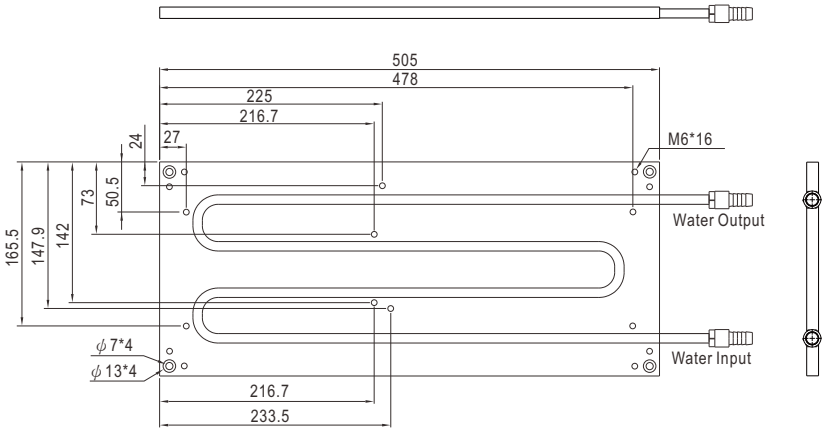

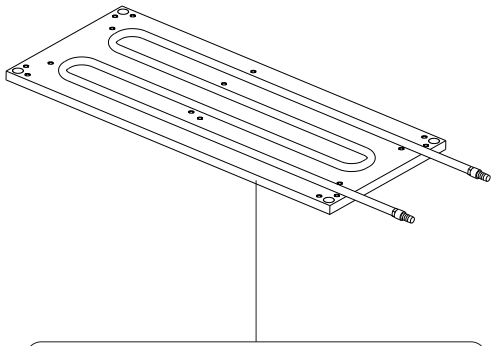

Apply thermal grease (gap filler) between power supply and cold plate connection surface.
Thermal grease (gap filler) :
* Thermal conductivity is no less than 1W/mK.
* Thickness is no more than 0.3mm.

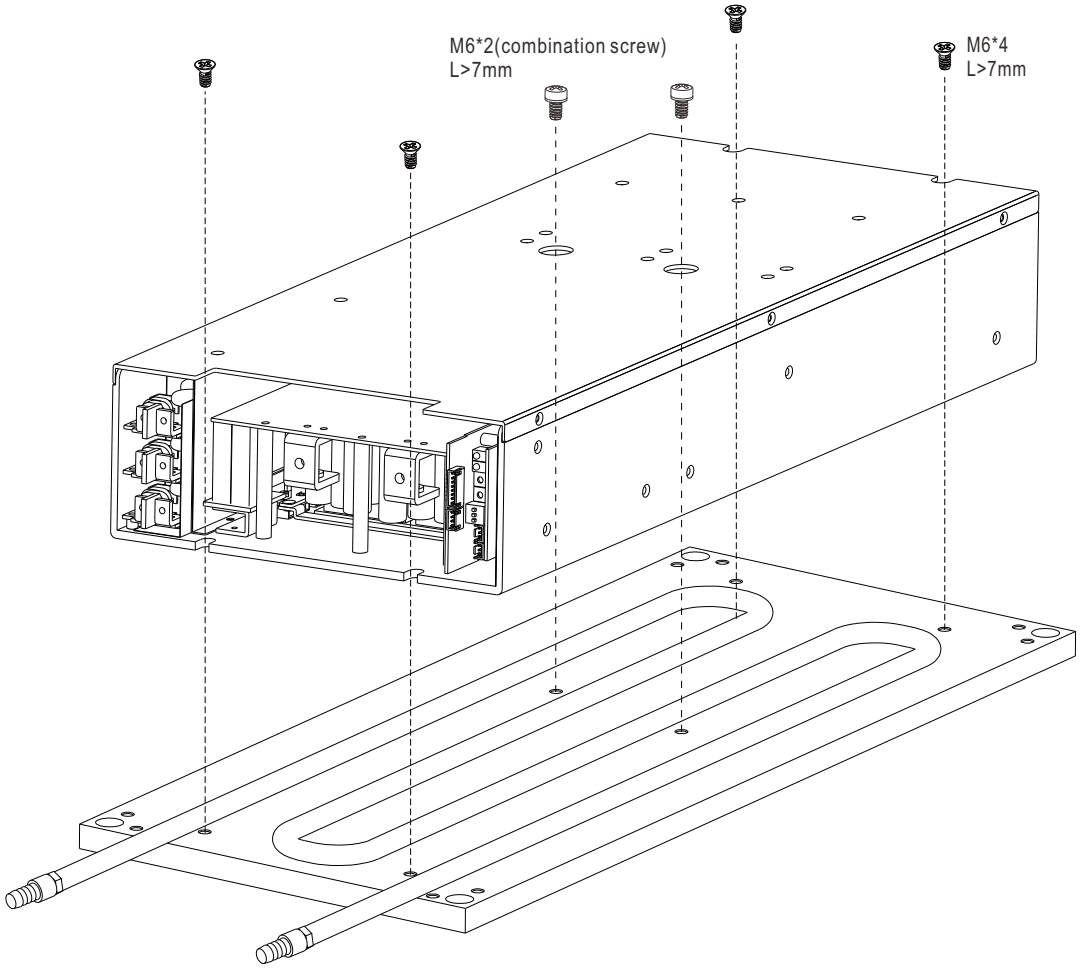

2.With 85CFM FAN x 2 (L type)

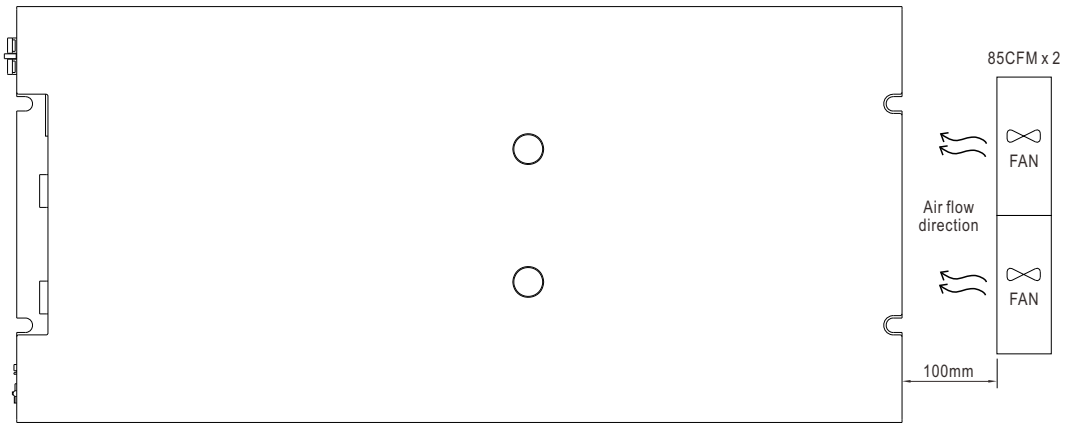

3.Condensation - Safe operating area.

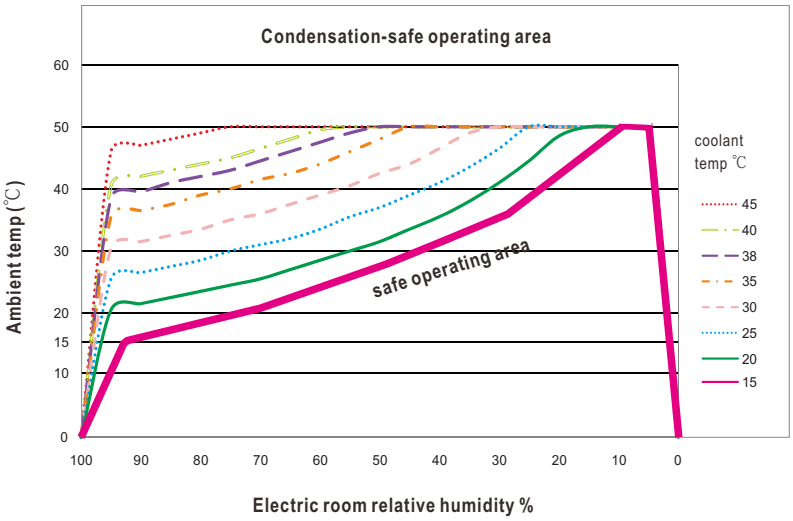

■ Installation Manual

Please refer to : http://www.meanwell.com/manual.html